Multi-family EV Charging Design Considerations

Introduction

An investment in electrical infrastructure for EV charging increases multi-family property values and attracts a growing segment of residents who are looking to purchase or already own an electric vehicle. ChargePoint provides innovative solutions for multi-family properties to provide residents of apartments and condominiums reliable EV charging conveniently located at their dedicated assigned parking space and at shared-use community parking spaces.

This document provides best practice guidelines for planning and installation of electrical infrastructure to support "make-ready" parking spaces dedicated for electric vehicle (EV) charging at a multi-family property. In general, ChargePoint recommends planning for at least 5% to 10% of residents at a multi-family property to purchase plug-in electric vehicles over the next 3 to 5 years, and for new construction multi-family projects, planning for 10% to 20% of residents in high EV density locations. Planning requirements for 17 or more multi-family units at building sites in California already include mandatory measures for 3% of total facility parking spaces to be EV capable, with at least one parking space dedicated for shared-use EV charging, and voluntary measures for as many as 6% to 9% of total facility parking spaces to be EV capable.

Consideration of infrastructure necessary to support present and future need for EV charging will "future proof" investments to avoid more costly retrofit upgrades later as demand for electric vehicle charging grows. For new construction and at sites where electrical service capacity is limited, consider ChargePoint intelligent Automatic Power Management system to efficiently share available aggregate power at a site and provide charging to an increased number of electric vehicles than otherwise possible.

Charging Station Standard

ChargePoint Multi-family solutions provide EV charging for multi-family residents and guests using Level 2 charging stations that provide up to 25 miles of range for each hour of charging. Level 2 charging stations are based on the J1772 industry standard, and all commercially available electric vehicles sold in North America include a vehicle inlet for Level 2 charging using this standard, including Tesla with their inlet adapter.

Shared-Use Community EV Charging

The ChargePoint platform provides shared-used EV charging for the multi-family community on our CT4000 family of easy-to-use ADA compliant charging stations that integrate design and functionality with superior reliability and durability. All CT4000 models offer one or two standard J1772 charging ports, each providing up to 7.2 kW output (208 V/240 V @ 30A). Bollard and wall mount configurations are available for easy installation anywhere. Every CT4000 also comes standard with cord management, with 18' and 23' cable length options available, and the self-retracting cord management system ensures that the cord is always off the ground when not in use.

Typically, each shared-use Level 2 port will charge as many as 2 to 4 EVs during the daytime, with each charging session lasting several hours in duration. At least one resident or guest will charge an EV overnight in a multi-family environment. Dual-port Level 2 charging stations therefore may charge as many as 4 to 10 EVs daily for residents and guests.

Property Managers are in complete control of the charging station policies, including who can use them, how much drivers pay to use them, and what messaging and video content to display.

With the CT4000 charging station, ChargePoint also provides an innovative solution for multi-family charging using a Waitlist option for residents. Enabling this feature makes it easy for residents to share charging ports and helps efficiently serve more drivers. Waitlist can maximize the utilization of CT4000 charging stations and works by allowing drivers to "get in line" for the next available charging port, and as ports free up, informing them when a station becomes available, temporarily reserving the port and holding it for them while they walk to their vehicle, drive it to the station, and plug in. The driver has the ability to accept the reservation and use the port, or the driver may decide to skip his/her turn and let the person behind go ahead – while retaining a place in line, or may simply opt-out of line altogether. The Waitlist feature may be enabled during daytime hours and automatically disabled off hours, for example after 9pm, to allow residents to park overnight and continuously charge their EV until the following morning.

Personal EV Charging

With ChargePoint Multi-family Home Service, residents have reliable access to personal EV charging conveniently located at their dedicated assigned parking space and for their exclusive use. Residents can unwind and relax without the hassle of coordinating with neighbors to take turns charging. With a personal home charging station, residents have peace of mind, knowing their charger is always available for topping off after work or for an unexpected charge on the weekend.

ChargePoint personal CPF25 charging stations are Level 2 chargers typically with up to 6.7 kW power output to an EV (208 V@32A) or up to

7.7 kW power output to an EV (240 V@32A). CPF25 charging stations may be wall-mounted or pedestal mounted. Dual-port pedestal mount CPF25 charging stations are also available for adjacent assigned parking spaces. All CPF25 stations can be equipped with optional cable retraction system, especially desirable for deployment in tandem open parking areas and in stacked parking platform applications.

EV Make-Ready Parking Spaces

EV "make-ready" parking spaces include conduit and electrical wiring to the building common power source and sufficient electrical panel capacity for simultaneous charging of electric vehicles in all EV parking spaces.

For both Shared-Use Community CT4000 and Multi-family Home Service personal CPF25 models, each Level 2 charging port requires a dedicated single-phase electrical circuit (32 A @ 208/240 V) with 40 A circuit breaker at the electrical panel. A certified electrician must install all electrical circuits in accordance with local and National Electric Code requirements.

For wall-mount charging stations, an EV make-ready parking space includes conduit and a pre-wired junction box that is capped and wall-mounted approximately two (2) feet above floor level to allow for ease of future installation of a Level 2 charging station.

EV make-ready options are also available to support pedestal (bollard) mount charging stations in open parking areas. In open area parking spaces, install conduit and wiring beneath the parking surface or below landscape near the parking curb.

Make-ready parking areas must also have acceptable cellular signal coverage to allow ChargePoint to communicate with the charging stations for access control, energy usage reporting and billing, as well as for optional power management. In enclosed parking garages, a cellular signal booster may be required to amplify the desired cellular carriers to within minimum acceptable levels for reliable communications with ChargePoint charging stations.

ChargePoint recommends using your preferred electrician or our certified installation partner to evaluate available capacity of existing utility service and electrical panels, as well as to identify any panel upgrades that may be required to support EV charging for multiple make-ready parking spaces.

An onsite evaluation is necessary to determine conduit and wiring requirements from panel to proposed "make-ready" parking spaces, as well as to measure cellular signal levels and identify suitable locations for placement of any necessary cellular signal booster equipment. Reference detailed ***Make-Ready Specifications*** at the end of this document.

General Planning Guidelines

General guidelines for selection of candidate parking spaces for "make-ready" EV charging include:

1. Determine if sufficient existing utility service and electrical panel capacity exist and identify costs for any necessary upgrades and/or new EV dedicated electrical panel.

2. For installation of dedicated EV electrical panel, choose panel location in close proximity to existing electrical supply.
3. Identify parking spaces that are in close proximity to an electrical room with common area electrical panel; reduce distance for conduit runs and electrical wiring from electrical panel to all proposed EV parking spaces. For Multi-family Home Service personal EV chargers, select assigned parking spaces.
4. If possible, avoid or minimize trenching requirements, especially more costly trenching to run conduit under asphalt surfaces.
5. Choose adjacent parking spaces in an area with adequate lighting and identify suitable locations with flat surface for wall mount stations or suitable floor surface for pedestal mount stations.
6. Use dual-port pedestal mount stations where possible in open areas for adjacent parking spaces or tandem parking spaces. Consider protective bollards where appropriate, especially for open tandem (back-to-back) parking spaces.
7. Determine optimum conduit layout to minimize linear conduit costs to multiple EV parking spaces and size all conduit and electrical wiring in accordance with National Electric Code requirements.
8. Measure cellular signal levels for 3G Verizon and 3G AT&T carrier signals at exact installation locations and identify optimum location for placement of ChargePoint gateway devices.
9. For below ground-level or enclosed parking garages, installation of a cellular signal booster often is required with indoor antenna located near gateway device and EV parking spaces and outdoor antenna typically located at the garage entrance ceiling or on the rooftop where cellular signal levels are optimum. Measure cellular signal levels at candidate outdoor antenna locations and determine suitable location for signal booster installation with low voltage power (120 V).
10. Determine cost budget options for make-ready electrical infrastructure to satisfy current needs and future needs. In new construction projects, consider installation of conduit to EV capable parking spaces during construction and then pulling electrical wiring via conduit upon installation of charging stations on a demand basis.
11. Prioritize locations for installation of charging stations based upon immediate and future needs, construction timelines, and costs.
12. Consider ChargePoint Automatic Power Management capability described in this document to dynamically share total available power at a site among an increased number of electric vehicles and control infrastructure costs (capital expense cost savings), as well as avoid utility demand charges by limiting absolute power at a site for EV charging (operational expense cost savings).

If you have pre-existing infrastructure or are using your preferred electrical contractor to prepare your site for charging, a Site Validation by our O&M partner will be required to certify compliance with electrical specification requirements and to ensure that ChargePoint will be able to provide reliable EV charging services to residents.

Cellular Gateway Device

ChargePoint charging stations communicate over the ChargePoint network via cellular carriers to provide the following features to property managers and EV drivers:

- Availability of amenity for EV charging at a multi-family property
- User authentication, access control, & billing
- Automatic power management and energy usage reporting
- Charging station utilization and session details for analytical reporting and planning
- Real-time charging status to drivers using the ChargePoint mobile app or web portal
- Ability for drivers to start & stop charging sessions using the ChargePoint mobile app
- 24-hr driver support to remotely start charging sessions (ChargePoint cards also start & stop sessions)
- Text and email notifications to drivers when vehicle battery is full or stops charging
- Station fault alarms and remote diagnostic capability
- Over-the-air software upgrades for new station features or enhancements (future proof investment)

A ChargePoint "gateway unit" consists of a cellular modem for wide area networking and built-in WiFi for local communications to/from CPF25 and CT4000 charging stations. The gateway device is located where cellular signal levels are optimum for either 3G Verizon, 3G AT&T, or Sprint carrier service, and each gateway unit is located within 150 feet line-of-sight to as many as nine (9) CPF25 charging stations. Each CPF25 charging station has built-in WiFi capability to communicate via the gateway device for ChargePoint network services. Shared-use CT4000 charging stations may include a built-in gateway cellular modem for wide area networking and include built-in WiFi for local area networking to/from up to nine (9) "non-gateway" CT4000 charging stations.

Your preferred installer must validate acceptable cellular signal strength at proposed EV make-ready spots prior to installation of the charging stations. The minimum required signal strength is -85 dBm (for example, -80 dBm is better than -90 dBm), as measured by a professional measurement tool, such as the Squid-Pro 3G. In enclosed parking structures, a cellular signal booster may be necessary to meet these requirements.

The CPF25 gateway is a UL Class 2 device and requires less than 4W power (33 mA@120V or 19 mA@208 V). ChargePoint recommends hard-wire electrical termination to the power source for the CPF25 gateway device. To avoid running a separate electrical circuit and conduit from electrical panel to the gateway device, ChargePoint suggests installation of the ChargePoint gateway device in proximity to at least one of the CPF25 charging stations in an area where cellular signal levels are acceptable. Tap into L1 and L2 of the 208 V electrical circuit at the

junction box used for electrical feed to one of the Level 2 charging stations, and install conduit to pull #10 - #14 AWG stranded or solid service electrical wiring (use L1 and L2 only – not ground wire) from junction box to gateway location. The gateway device dimensions are 11 inches horizontal width by 13-3/8 inches vertical length and 5-3/8 inches in depth.

Data specifications, installation guides, and mounting templates are available at

https://www.chargepoint.com/support/guides/

Calculating Electrical Load

The first step in assessing the impact to existing utility service or planning for new electrical service is to determine the total kVA load of all currently powered devices using common power and then add the proposed kVA load for all EV make-ready parking spaces.

Each CPF25 and CT4000 charging port uses a dedicated 208 V 32A single-phase circuit that consists of taking two legs of a three-phase system (Line 1, Line 2), plus a ground. The simplest load calculations are with single-phase loads.

The kVA load of a single 32A Level 2 charging port is equal to the circuit voltage (208 V) multiplied by the maximum current draw by the vehicle (32 amps). For each Level 2 port, maximum load = 208V x 32 Amps = 6.656 kVA. For 208V/32A electrical service, use kVA load of 6.656 kVA for each parking space, and for 10 "make-ready" parking spaces, the kVA load will therefore be 66.56 kVA.

Common Scenarios

Utility service is primarily 3-phase 480 V or 277 V service, and the utility provider installs, owns, operates and maintains the distribution transformer, the electric meter and secondary connections in the transformer. In general, it is the customer's responsibility to install the mounting pad for the transformer and install all conduit and conductors from the service entrance to the main panel. A detailed load analysis is required for properly sizing the transformer to meet demand loads.

The chart below shows common transformer sizes and maximum EV charging ports supported by each standard transformer size, as well as the primary 480 V service Amps and secondary 208 V feeder amps to electrical panel. When setting a dedicated transformer to support the installation of multiple Level 2 EV charging stations, this chart also shows the number of ports each size will support.

To support up to 6 single-port or 3 dual-port L2 stations each simultaneously drawing full 6.656 kVA maximum load, a 45 kVA step-down transformer is the right choice. However, to plan for future growth without having to revisit the electrical infrastructure and provide full instantaneous power to as many as 16 electric vehicles simultaneously charging, a 112.5 kVA transformer is the right choice.

Transformer Sizing Chart (32 Amp Ports)

kVA Rating	Ports Possible	Dual Port Stations	208 V Secondary Amps	480 V Primary Amps
45	6	3	125	54
75	11	5	208	90
112.5	16	8	312	135
150	22	11	416	180
225	33	16	625	270
300	45	22	833	360
500	75	37	1388	601
750	112	56	2082	903
1000	150	75	2776	1204

Electrical Panel

In retrofit multi-family environments, consider using existing electrical panel capacity for an initial small number of "make-ready" EV parking spaces, and compare costs associated with adding an electrical panel dedicated for EV charging in multiple parking spaces.

For new construction, size both electrical service transformer and EV panel for desired total number of Level 2 EV ports simultaneously charging at full power output. Select an EV panel with additional breaker slot positions to provide an increased number of EV charging ports using ChargePoint Automatic Power Management system for efficient use of aggregate power of the panel and transformer.

Level 2 charging stations are considered continuous load devices (EVs draw maximum load for long durations); and therefore, electrical branch circuits to EV chargers must be sized at 125% of the load in accordance with National Electric Code requirements. This means that for a maximum 32 A @208/240V output to an electric vehicle, 40 A breakers are required and wiring conductor ampacity sized in accordance with NEC for continuous load devices. Typically, 6 AWG or 8 AWG electrical wiring is used depending upon distance and calculated voltage loss between electrical panel and charging station.

When planning for multiple EV charging stations, it is best practice to segment non-continuous and continuous loads, with all branch circuits for EV charging on a dedicated electrical panel or subpanel assembly with 40 A circuit breakers. Overcurrent protection for feeders and branch circuits supplying EV charging stations must have a rating not less than 125% of the maximum load of the EV Supply Equipment. When sizing new electrical panels dedicated for EV charging, all branch circuits are sized to support continuous load and panel rating sized for 125% of continuous load on all branch circuits. A dedicated 3-phase EV panel rated at 400 A (and 2-pole 40 A breaker on each branch circuit) will support as many as 15 branch circuits simultaneously charging at full power output to electric vehicles.

Dedicated EV Panel	Breaker Size	Max # Make-Ready EV Spaces[1]	Max # Make-Ready EV Spaces with Power Management (2:1 to 4:1)[2]
1-Phase 200 A Panel	40A	5	10 to 20[3]
3-Phase 225 A Panel	40A	9	18 to 36[3]
3-Phase 400 A Panel	40A	15	30 to 60[3]
3-Phase 800 A Panel	40A	33	66 to 132[3]

[1] Rated for 125% of continuous load

[2] Rated for 125% of continuous load

[3] When using ChargePoint Power Management feature, upper limits above subject to available slot positions on electrical panel.

Using a 45 kVA transformer and a 3-phase 225 A electrical panel, as many as 6 electric vehicles will be able to simultaneously charge at full power, with up to 6.656 kW of instantaneous power dispensed to each vehicle. However, using a 75 kVA transformer and the same 3-phase 225 A electrical panel, as many as 9 electric vehicles will be able to simultaneously charge at full power, with up to 6.656 kW of instantaneous power dispensed to each vehicle. As described below, an increased number of electric vehicles may share the total aggregate power capacity using ChargePoint Automatic Power Management, and as many as 18 or more electric vehicles may simultaneously charge at reduced power when using 75 kVA transformer and 3-phase 225 A electrical panel.

ChargePoint Automatic Power Management Technology

Code and Feature Description

The 2014 National Electric Code added the following provision to allow oversubscription of the electrical service:

> *625.41 Where an automatic load management system is used, the maximum electric vehicle supply equipment load on a service and feeder shall be the maximum load permitted by the automatic load management system.*

ChargePoint intelligent power management technology allows a maximum aggregate load to be set on a group of stations. The stations in concert with ChargePoint cloud-based services actively manage the individual power output to each vehicle to ensure the maximum allowed aggregate load is never exceeded. No additional hardware or systems are required onsite; all load management functions are done by the charging stations working with ChargePoint cloud services. Vehicles charge normally at up to full power output as long as there is sufficient power available. As more vehicles begin charging, the output to each vehicle is automatically adjusted to

stay within the power allowance. As vehicles finish charging, the available power automatically is redistributed to the remaining vehicles that are actively charging.

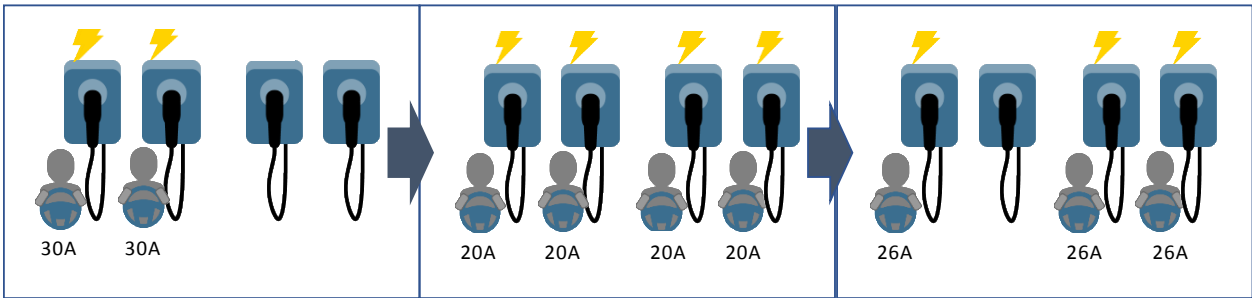

UL Listing for Energy Management Device

ChargePoint stations are UL 916 listed as Energy Management devices and networked for real-time communication to ensure that they operate within the provisioned load allowance.

Failure Modes

A failsafe mechanism is in place such that in the event of a communications failure each unit will go into safe mode. Safe mode allows individual vehicles to continue charging for a brief period at their current rate before ramping down, while not allowing any additional load on the system.

Typical Deployment Scenarios

ChargePoint recommends using a panel dedicated to EV charging and running a dedicated 40 A circuit to each L2 port to provide for flexibility in the future. See the ChargePoint installation guides for wiring diagrams.

Oversubscription Guidelines

For multi-family settings, ChargePoint recommends no more than a 2:1 oversubscription ratio. Although multi-family charging includes overnight charging, other multi-family charging needs include short-duration evening and weekend charging where the EV driver may need more range than a high oversubscription ratio can provide. ChargePoint recommends designing to meet the practical needs of the drivers on a daily basis, not the worst-case scenario.

A networked charging solution, Automatic Power Management intelligently tracks instantaneous power output in real-time for all active EV charging sessions and dynamically adjusts output to optimize charging performance for each vehicle based upon available total power capacity at the electrical panel. Using ChargePoint Power Management, significant utility cost savings may be realized at multi-family properties, especially in high-density EV locations.

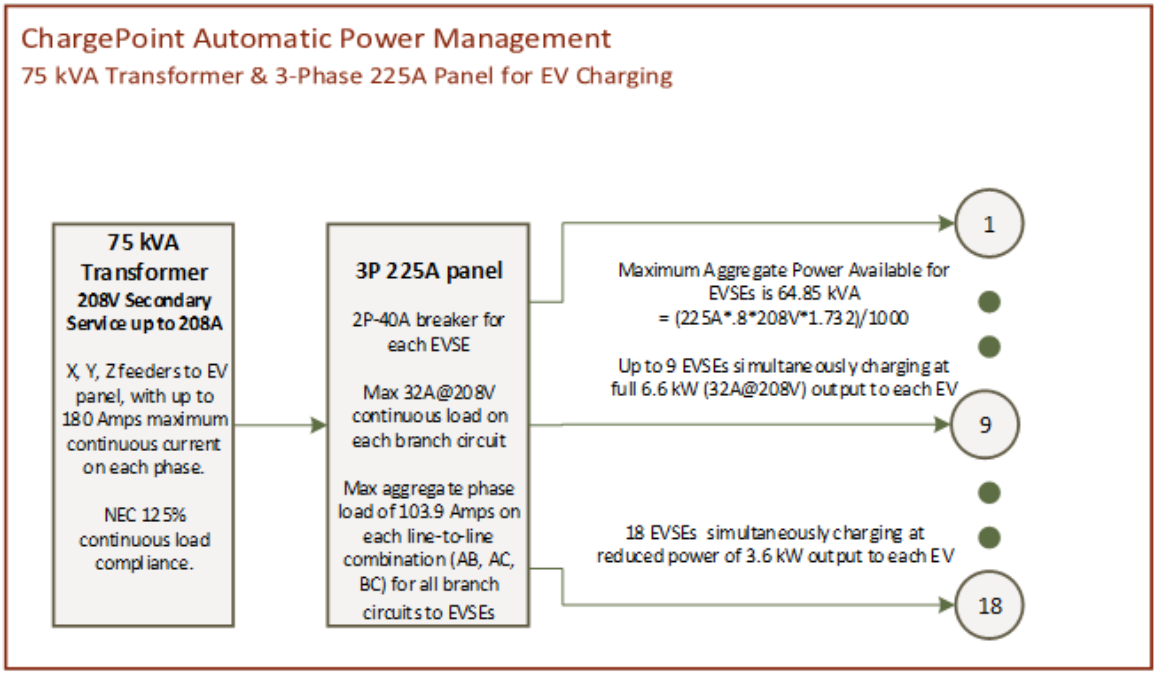

Cost Mitigation Strategies

Costs for multi-family make-ready installations are largely determined by existing electrical capacity and distances from electrical panel to parking spaces. For retrofit multi-family property locations where electrical capacity constraints may exist, one may consider limiting maximum current output to 16 Amps using a power option available with ChargePoint stations. With this option, Electric Vehicles will still realize up to 12.5 miles of range for every hour of charging. For a dedicated personal charger plugged in overnight or for just a few hours during the day, the amount of energy stored in the vehicle battery will be sufficient for most driver commutes or driving around town. In this case, each "make-ready" parking space would require a dedicated single-phase electrical circuit, 20A@208/240V. This means that for a 16 A output to EV, 20 A breakers are required and the wiring sized for 20 A.

Where feasible, ChargePoint recommends the full power configuration, so that EV drivers may realize increased mileage range for each hour of charging. In new construction of multi-family housing, especially in high-density EV areas, ChargePoint always recommends the full power configuration with dedicated EV electrical panels to accommodate increasingly growing demand for EV charging.

Charging Station Installations

ChargePoint certified installation partners or your preferred electrician may install charging stations and gateway devices at make ready parking spaces on an as-needed basis, typically with several stations installed for initial deployment and more added as drivers sign-up for the home charging service. If your preferred electrician installs the electrical circuits to the "make-ready"

specifications below, a ChargePoint O&M partner will certify the electrical infrastructure is compatible with ChargePoint stations and verify acceptable cellular signal levels. If electrical infrastructure and cellular signal levels comply with make-ready specifications, our O&M partner can usually install on the same day as Site Validation. Note that your preferred electrician may install the charging stations after completion of our online ChargePoint CPF25 and CT4000 installation course for a nominal fee (ChargePointUniversity.com). The installer uses the ChargePoint mobile wizard app to pinpoint the exact location of the charging station at time of installation and to identify location details, electric circuit ID, panel ID and total electric service capacity for EV charging at the site.

Upon completion of physical installation and site validation, ChargePoint activates the installed charging stations in the ChargePoint NOS and remotely configures each station in software. ChargePoint configures each personal charging station with an access control policy to prevent unauthorized use, and the resident assigned access to the charging station has visibility of real-time charging status using the ChargePoint mobile app or web portal. For shared-use charging stations, the Property Manager has complete control of access and pricing policies for EV charging for residents and guests. Energy usage details are available for all charging sessions, and text notifications sent to residents and guests when the vehicle battery is full or stops charging.

Make-Ready Specifications

1. Ensure the appropriate electrical panel service capacity and electrical system, including any on-site distribution transformer(s), have sufficient capacity to charge all EVs simultaneously at all EV make-ready parking spaces at full rated amperage of the charging station. Where ChargePoint Power Management feature will be utilized to manage aggregate power at a site, ensure sufficient electrical service and system capacity to charge all EVs simultaneously at all EV make-ready parking spaces at no less than 33% or 50% of the full rated amperage of the charging station for 3:1 or 2:1 oversubscription.

2. Electrical load calculations and site plan design must be based upon minimum 40 ampere dedicated branch circuit from electrical panel to each EV make-ready parking space for full power output to EV of 6.7 kW (32A@208V) or 7.7 kW (32A@240V). Ensure electrical panel has capacity to install 40A minimum dedicated branch circuit and space(s) reserved to permit installation of branch circuit overcurrent protective device(s). Service panel or subpanel circuit directory shall identify the overcurrent protective device spaces reserved for future EV charging, as "EV Charger <space number>" with cross reference to each EV parking space number.

3. Ensure installation is complete for all EV make-ready parking spaces, including installation of electrical panel(s) or subpanel(s), all dedicated EV branch circuits and 40A overcurrent devices, raceways from main service or subpanel terminated in close proximity to the proposed location of charging station(s), and electrical wiring pulled. The entire electrical system, including feeder overcurrent protection, electrical panel, branch circuit overcurrent protection, and electrical wiring must be sized for 125% continuous load requirement in accordance with NEC and local building code. Ensure all EV parking spaces have painted numbers for ease of identification and to cross reference to appropriate electrical panel identifier and overcurrent device space(s) on panel or subpanel. Ensure EV parking spaces are "made ready" for installation of either wall-mount or pedestal- mount charging stations.

    a. The wall-mount CPF25 charging station is designed for installation 4 feet above grade and secured to a flat masonry wall or hollow wall with wood studs 16" apart. Terminate each make-ready circuit using a 4-inch junction box installed 2 feet above grade with at least 3 feet of coiled wire remaining. For adjacent parking spaces, consider a single junction box with sufficient wiring for both make-ready spaces.

    b. The pedestal-mount CPF25 charging station may be installed either casting into new concrete or onto an existing concrete floor surface or slab. Pedestal mount CPF25 charging stations require electrical wiring and conduit routed from bottom of pedestal. In new construction projects, cast conduit in concrete and "make-ready" each EV parking space by terminating threaded conduit flush with floor and capped with threaded plug at front left or front right of parking space. The conduit for wiring must be ¾ inch to 1¼ inch (maximum) in diameter. The service wiring will extend 6 feet above surface at time of installation of pedestal-mount station.

4. Ensure the installation of the ChargePoint Gateway device(s) to provide connectivity services to the ChargePoint Cloud Network. The Gateway Device is a UL Class 2 device and requires 4 watts of power (33 mA@120 V or 19 mA@208 V). Mark the installation location for each Gateway device on site plans. Each Gateway supports up to nine (9) CPF25 ports and installed within 150 feet (line of sight) from the charging station(s). Client to ensure minimum required 3G CDMA (Verizon or Sprint) or 3G GSM (AT&T in U.S.A. or Rogers in Canada) cellular signal levels at each gateway device location. The minimum required signal strength is -85 dBm (for example, -80 dBm is better than -90 dBm), as measured by a professional measurement tool, such as the Squid-Pro 3G. A cellular signal booster may be necessary to meet these requirements.
5. Refer to details included in the installation guides for CPF25 personal charging stations and associated gateway devices.
6. For shared-use community charging stations, refer to details included in the installation guide for the CT4000 product family.