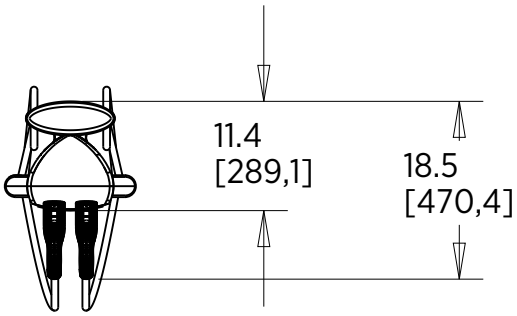
11.4
[289,1]
18.5
[470,4]

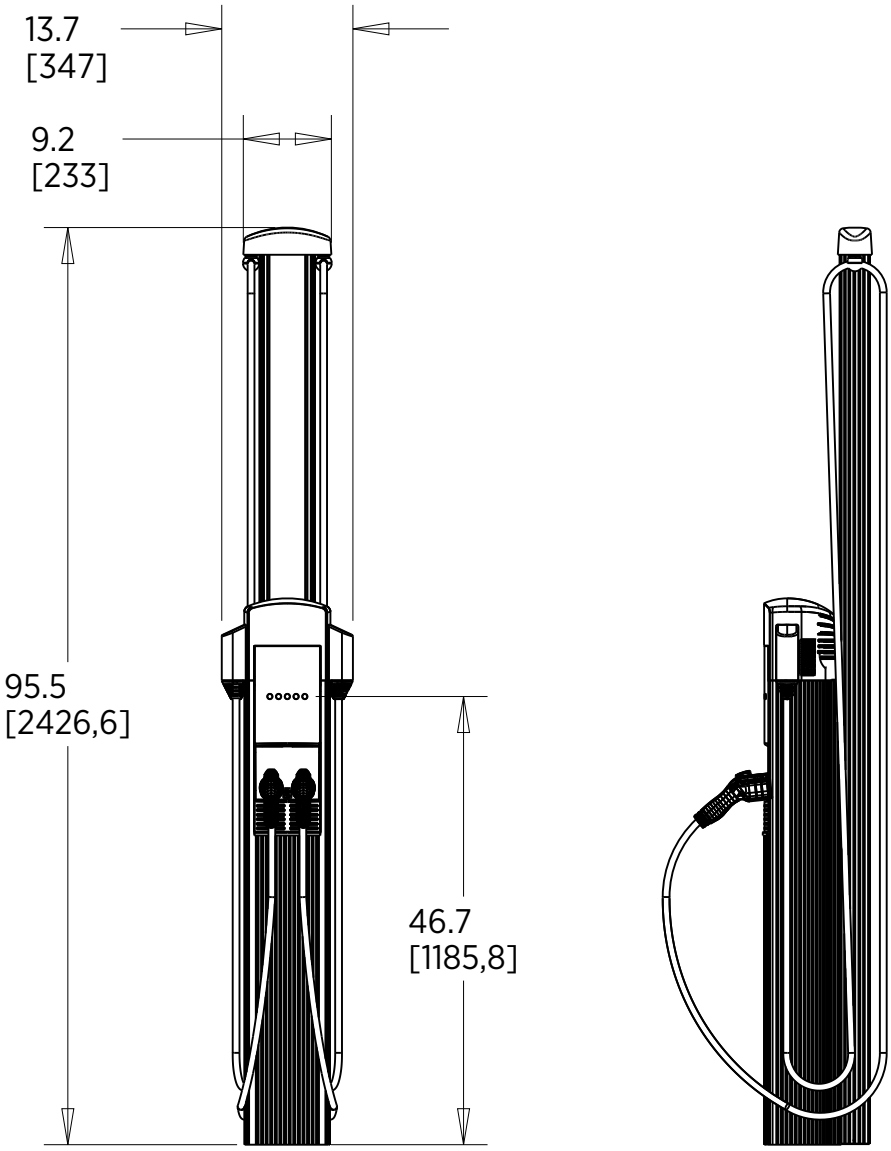
13.7
[347]
9.2
[233]
95.5
[2426,6]
46.7
[1185,8]